TACT switch

Snap-in & Surface mount Type (6 X 3.5mm)

MODEL NO.
1101 Series

Features

Snap-in & Surface mount type tact switch.

Outline dimension 6.0mm x 3.5mm and 4.3mm or 5.0mm height.

Vertical and horizontal operating direction.

Applications

Varions controls for devices in automotive.

Controls for image/sound devices, radio equipment.

Operating signal input switches, etc.

Main Specifications

Rating	50mA 12V DC		
Travel	0.25±0.1mm		
Contact Resistance	100 mΩ max.		
Operating temperature	-20℃ ~ 70℃(45% ~ 85% RH)		
Bounce	10 m sec max.		
Operating Force	130gf	180gf	250gf
Operating Life	50,000 Cycles		30,000 Cycles

Subsidiary Production Code

Snap-in Type

Code number	Operating direction	Knob Height (□)	Drawing
1101□	Vertical	4.3mm= Default /5.0mm = A	1
1101V□	Horizontal	3.15mm= Default /3.85mm = A	2

SMT (Surface Mount Type)

Code number	Operating direction	Knob Height (□)	Guide Boss	Drawing
1101NH□	Vertical	4.3mm= Default 5.0mm = A	Without	3
1101H□			With	4
1101NE□			Without	5
1101E□			With	6
1101NS□			Without	7
1101S□			With	8

No.	3D	Dimension Type	P.C.B pattern dimension
	1101□		
1	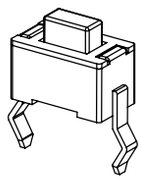	Unit : mm 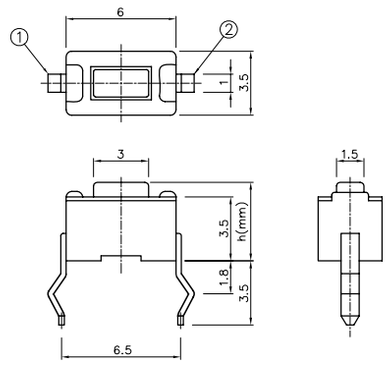 □ h - 4.3 A 5	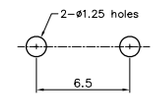 Circuit Diagram
	1101V□		
2	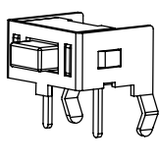	Unit : mm 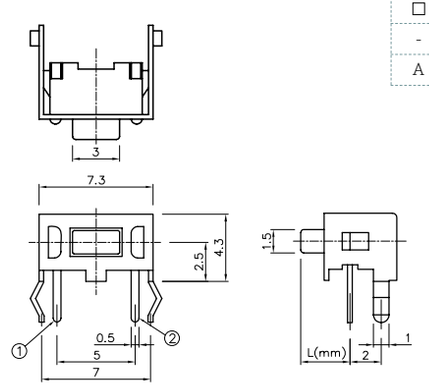 □ L - 3.15 A 3.85	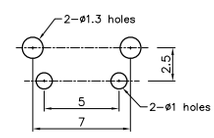 Circuit Diagram 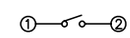
	1101NH□		
3	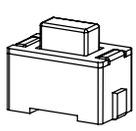	Unit : mm 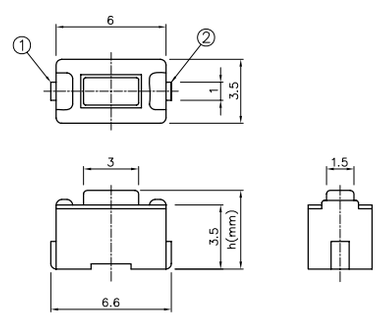 □ h - 4.3 A 5	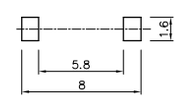 Circuit Diagram 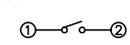
	1101H□		
4	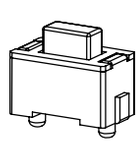	Unit : mm 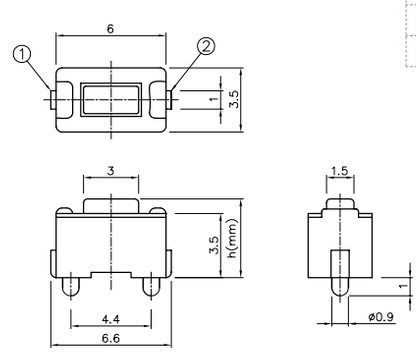 □ h - 4.3 A 5	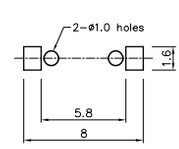 Circuit Diagram 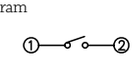

No.	3D	Dimension Type	P.C.B pattern dimension
	1101NE□		
5	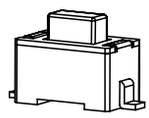	Unit : mm □ h - 4.3 A 5 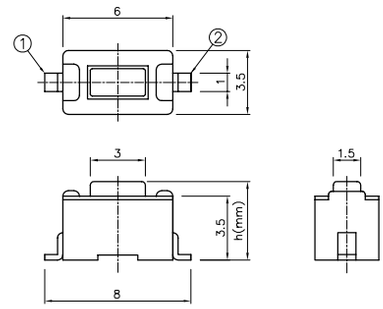	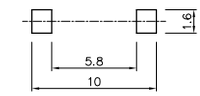 Circuit Diagram 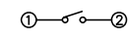
	1101E□		
6	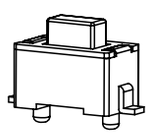	Unit : mm □ h - 4.3 A 5 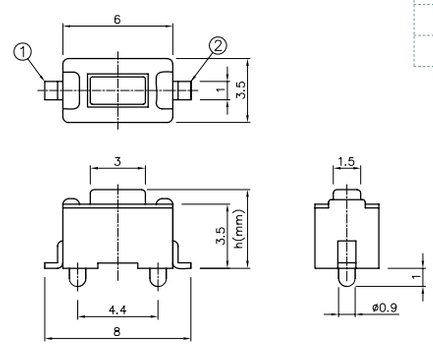	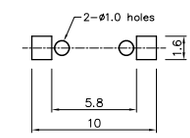 Circuit Diagram 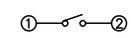
	1101NS□		
7	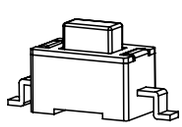	Unit : mm □ h - 4.3 A 5 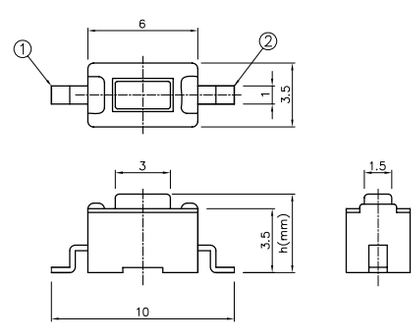	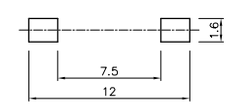 Circuit Diagram 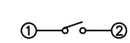
	1101S□		
8	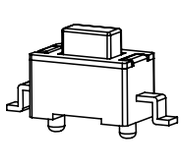	Unit : mm □ h - 4.3 A 5 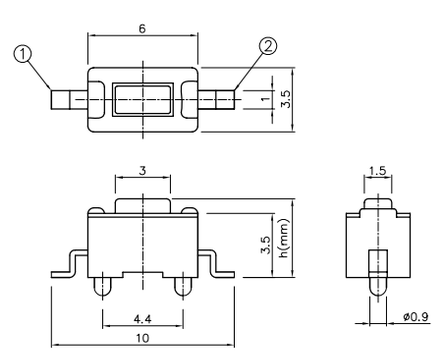	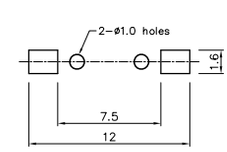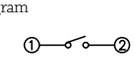 Circuit Diagram